Profile 8 120x40 8NO light, natural



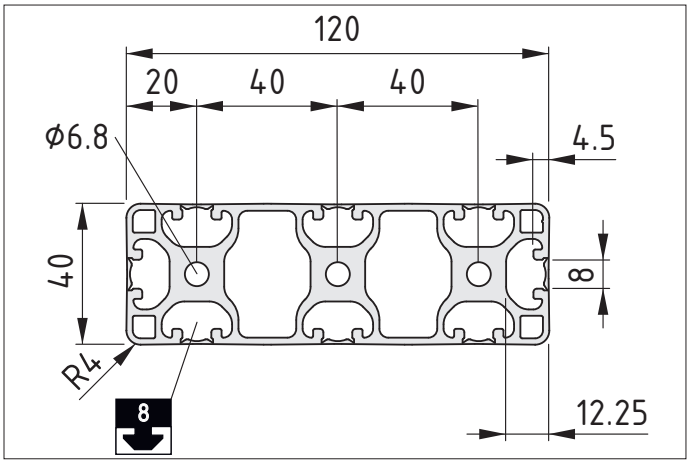

REACH RoHS

Profile 8 120x40 8NO light is a universal construction profile made of high-quality anodized aluminium in the modular dimension of Line 8. This weight-reduced aluminium profile in the light design variant from item features eight closed Line 8 profile grooves that can be opened up.

Scope of Delivery

Technical note

0.0.729.07 Please click here for further information!

Properties	
Article number	0.0.729.07
Colour	natural
Delivery unit	1 pce., length 6000 mm
Weight	4.50 kg/m
Material	Al, anodized
Cross-sectional area	16.69 cm^2
Moment of Inertia, torsional	5.90 cm^4
Moment of Inertia, x-axis	26.00 cm^4
Moment of Inertia, y-axis	231.53 cm^4
Resistance Moment, x-axis	13.00 cm^3
Resistance Moment, y-axis	38.59 cm^3

Accessoires	
0.0.418.54	Cap 8 120x40
0.0.627.27	Cap 8 120x40
0.0.724.62	Automatic-Fastening Set 8 S
0.0.724.68	Automatic-Fastening Set 8 S 40
0.0.731.29	Automatic-Fastening Set F 8 S 40
0.0.612.88	T-Slot Opener 8NO
0.0.612.89	T-Slot Opener 8NO for Standard-Fastening Set
0.0.612.47	T-Slot Deburrer 8NO

item Industrietechnik GmbH
Friedenstrasse 107-109
42699 Solingen, Germany

+49 212 6580 0
info@item24.com
item24.com

Quality management to
DIN EN ISO 9001:2015
Solingen, 15 January 2019

Status: 02.10.25